C2-A Perpetual Calendar Clock Module

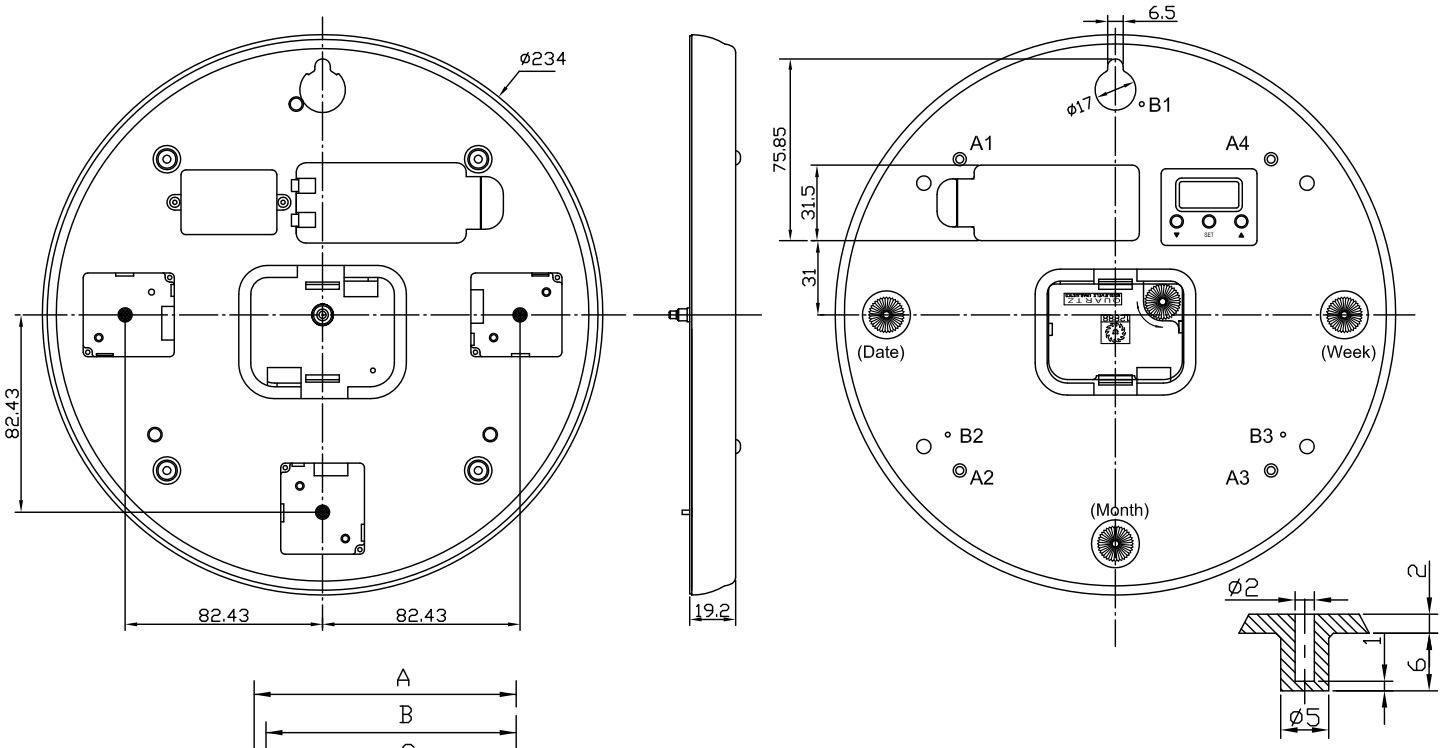

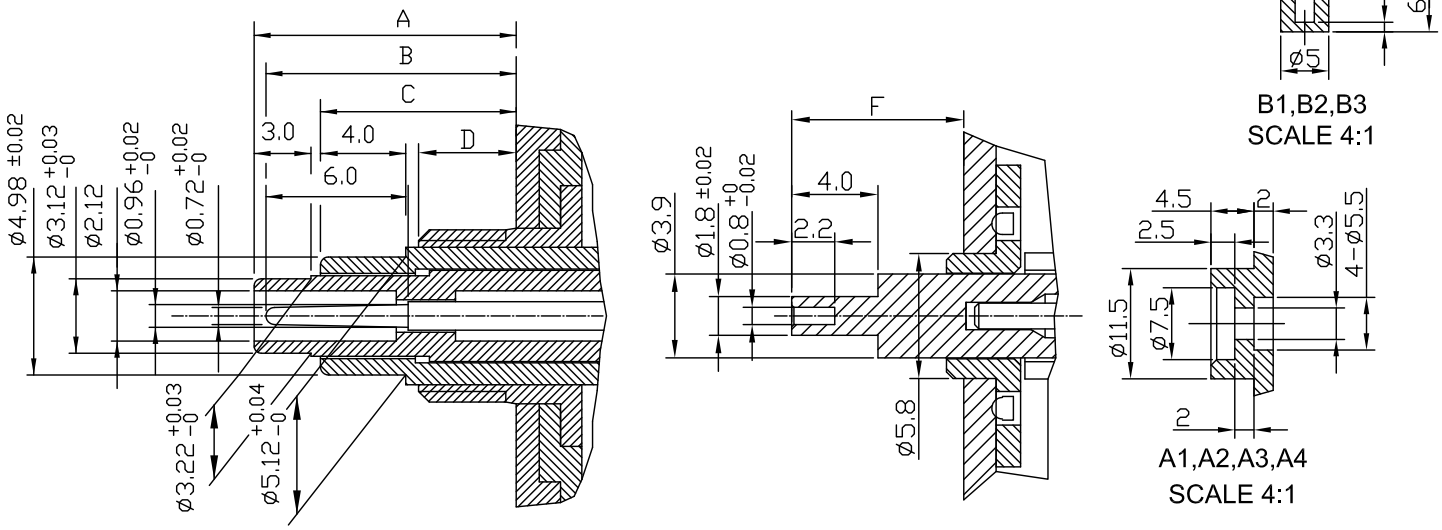

*UNIT:m/m

TYPE \ SPEC	A	B	C	D	F	DESCRIPTION
C2-AS0WMD	12.5	11.7	9.0	5.0	2.5	STANDARD MOVEMENT
C2-ASC1WMD5.0	15.0	14.2	11.5	7.5	5.0	AUTO WEEK,DATE,MONTH MOVEMENT
C2-ASC5WMD5.0	18.0	17.1	14.5	10.0	5.0	
C2-AT0WMD	12.5	11.7	9.0	5.0	2.5	SWEEP MOVEMENT
C2-ATC1WMD5.0	15.0	14.2	11.5	7.5	5.0	AUTO WEEK,DATE,MONTH MOVEMENT
C2-ATC5WMD5.0	18.0	17.1	14.5	10.0	5.0	

SPECIFICATIONS

OPERATING VOLTAGE	2.5V~3.2V
TIME KEEPING ACCURACY	±30SEC/MONTH AT 1.5V DC.
CURRENT CONSUMPTION	LESS THAN 150μA AT 1.5V DC.25°C (UNADJUSTED)(TIME)
TORQUE AT SECOND HAND	LESS THAN 0.6 (GF-CM) (STANDARD MOVEMENT) LESS THAN 0.6 (GF-CM) (SWEEP MOVEMENT)
TORQUE AT MINUTE HAND	LESS THAN 36 (GF-CM)
OPERATING TEMPERATURE RANGE	-10°C~60°C
BATTERY LIFE	ABOUT 1 YEAR (UM-3 x 2)

2023-08-07

YOUNG TOWN